19-inch (483mm) Halogen Searchlight

Remote Lever-Gear Control with 4.5 Million Candlepower

Carlisle & Finch is the standard of the U.S. Navy, U.S. Coast Guard and U.S. Federal Prisons.

Features

- **Beam Intensity:** 4.5 Million Beam Candlepower illuminates an object/person approximately 2121 meters away on a clear night!
- **Remote Lever-Gear Aiming:** Lever-Gear "Twist-Handle" uses Rack and Pinion Gearing to move Searchlight Up and Down, with built-in Friction Break. Beam can be locked in placed Horizontally and Vertically with no tools.
- **Shock-mounted Lampholder...** Helps prevent filament breakage due to excess ship vibration, or if fixture is impacted by bullets or rocks at a Prison Facility (Medium Prefocus Lamp Types-only).
- **Robust Powder Coat Finish:** Scratch-resistant and Salt-resitant (custom colors available!)
- **Anti-Corrosive Materials:** Marine Grade Aluminum with Stainless Steel Fasteners.
- **LED Hybrid (optional):** Auxiliary LED Light Modules project a "Wall of Light", 150 Meters Wide and over 230 Meters away, used for strategic short range perimeter lighting.
- **Slip-Rings in Base (optional):** Provides continuous, 360° Motion with No Stop Points.
- **NightFINDER™ Thermal Camera (optional):** Optional thermal camera added to searchlight provides greater Night Vision capabililty.

Searchlight Specifications

Temperature Range: -25 ºC to +48 ºC (approx)
Environmental Protection: IP56
Power Consumption: 115VAC/8.7 Amps or 230 VAC/4.35 Amps; 50/60HZ
Vertical Span: +35 Deg to -35 Deg (Total 70 Deg approx)
Horizontal Span (Standard): 385 Degrees with unique Sliding Stop.
Horizontal Span (Slip-Rings): Unlimited, Continuous with No Stop Points.
Light Source: Incandescent Halogen and LED with Hybrid Option.
Beam Intensity: 4.5 Million Candela
Distance Serviced measuring 1 LUX: 2121 meters on a clear night.
Reflector: Silvered Glass Mirror
Materials: Marine Grade Aluminum and Stainless Steel
Finish: Salt-resistant White Power Coat (Custom Colors available)

"Leaders in Searchlight Technology for over 122 years"

Model 19SL3794DX, Standard Base, Lever-Gear Control
Dimensions in Inches (mm)

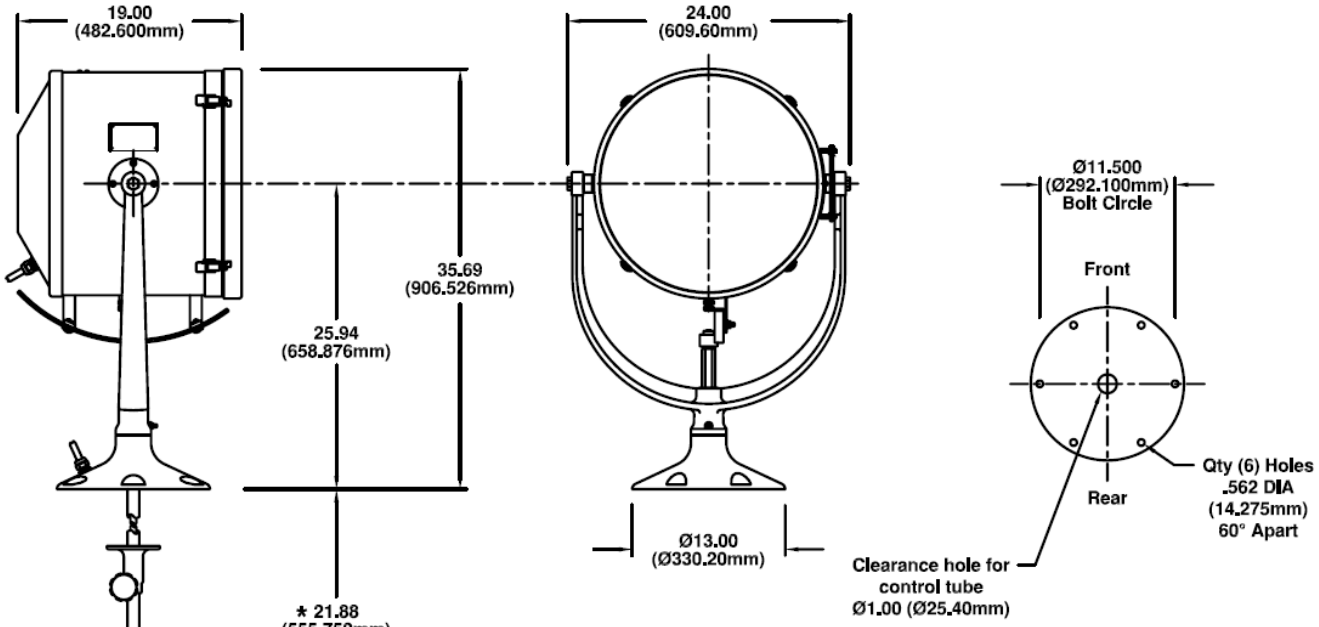

* NOTE: This control length can be any length as specified by customer. Consult factory for custom dimension.

Weight = 70 LB (32 KG)

DRAWN	DATE	THE CARLISLE & FINCH CO. CINCINNATI, OHIO
RPA	5/28/09	TITLE: 19" SEARCHLIGHT
CHKR	APVD	SIZE F · PART NO. 19SL3794DX____(DIM) · REV .
		SCALE NONE · SHEET 1 OF 1

Model 19SL3784DX, Slip-Ring Base, Lever-Gear Control
Dimensions in Inches (mm)

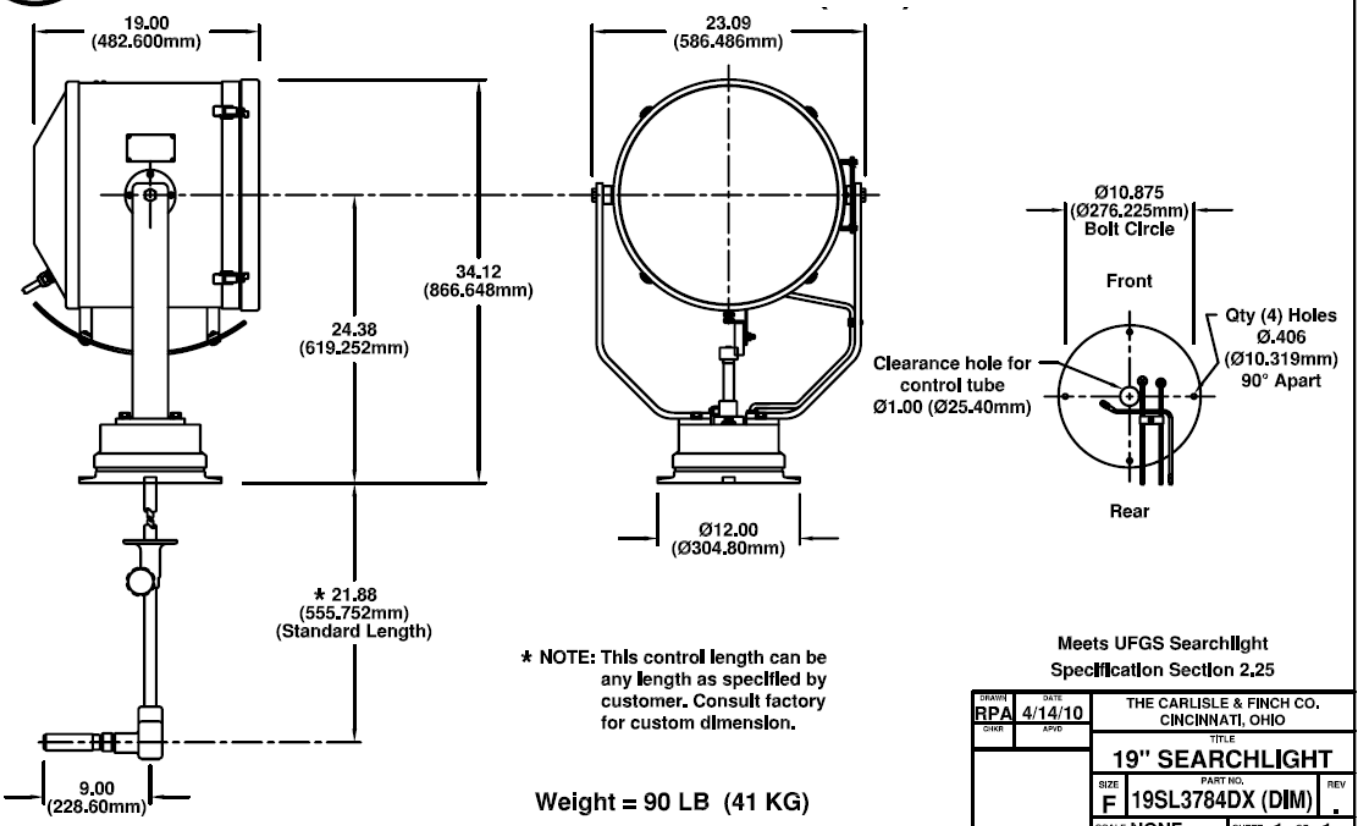

* NOTE: This control length can be any length as specified by customer. Consult factory for custom dimension.

Weight = 90 LB (41 KG)

Meets UFGS Searchlight Specification Section 2.25

DRAWN	DATE	THE CARLISLE & FINCH CO. CINCINNATI, OHIO
RPA	4/14/10	TITLE: 19" SEARCHLIGHT
CHKR	APVD	SIZE F · PART NO. 19SL3784DX (DIM) · REV .
		SCALE NONE · SHEET 1 OF 1

Model 19SL3798DX, Standard Base with Tall Pedestal
Lever-Gear Control
Dimensions in Inches (mm)

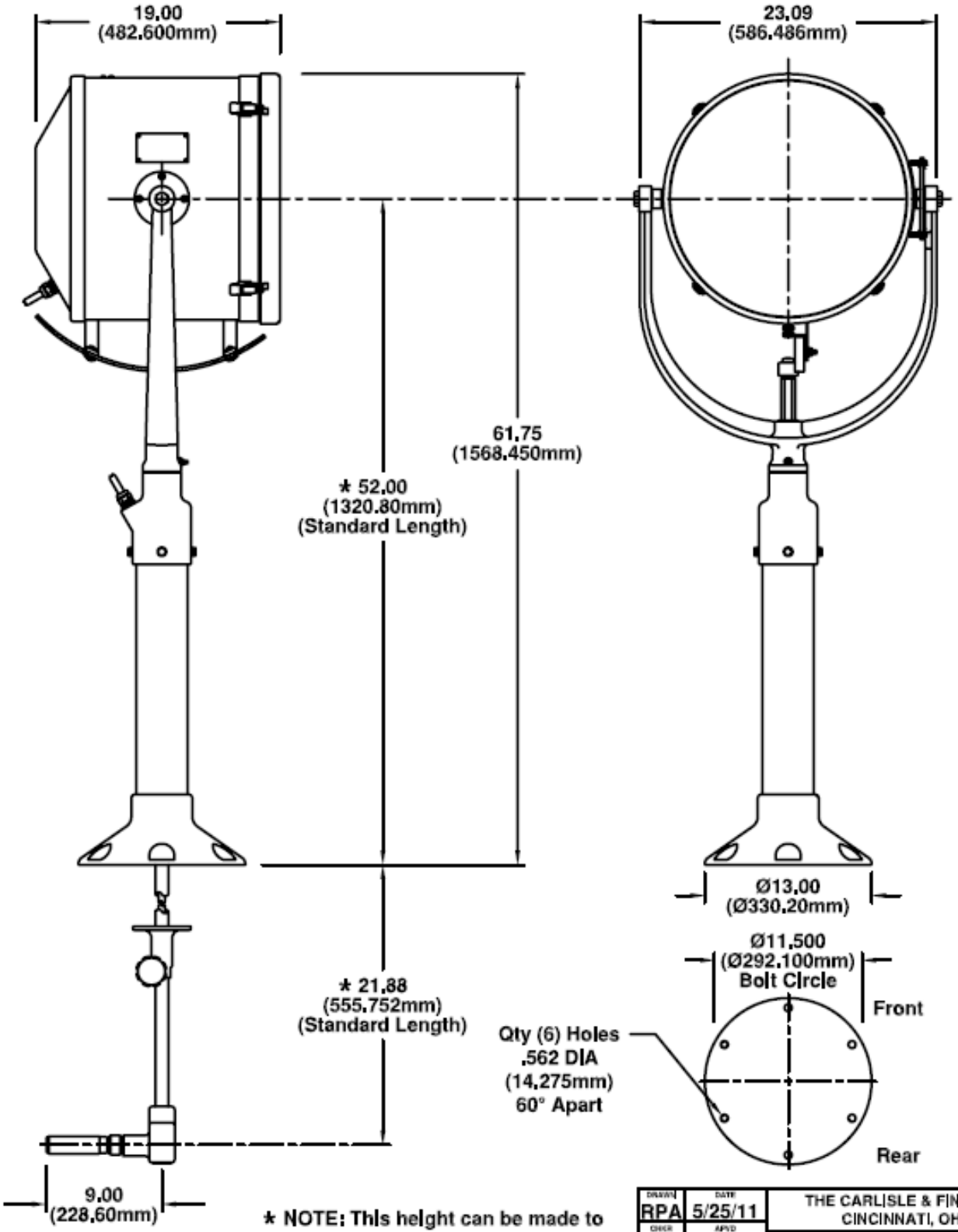

* NOTE: This height can be made to any length as specified by customer. Consult factory for custom dimension.

Weight = 83 LB (38 KG)

DRAWN	DATE	THE CARLISLE & FINCH CO, CINCINNATI, OHIO
RPA	5/25/11	
CHKD	APVD	TITLE: 19" SEARCHLIGHT
		SIZE: F · PART NO.: 19SL3798X(DIM) · REV: .
		SCALE: NONE · SHEET 1 OF 1

Searchlight Selection Table

Model Number	Description	Reference
19SL3794DX	19-inch (483mm) Diameter Halogen Searchlight mounted on a Standard Base, with Lever-Gear Controls	See DWG at Top of Page 2
19SL3784DX	19-inch (483mm) Diameter Halogen Searchlight mounted on a Slip-Ring Base, with Lever-Gear Controls	See DWG at Bottom of Page 2
19SL3794DX	19-inch (483mm) Diameter Halogen Searchlight mounted on a Standard Base with Tall Pedestal, and Lever-Gear Controls	See DWG at Top of Page 3
19SL3784DX	19-inch (483mm) Diameter Halogen Searchlight mounted on a Slip-Ring Base with Tall Pedestal, and Lever-Gear Controls	Request Drawing from Factory

NOTE: The above searchlights are aimed with remote Lever-Gear Controls, and include a Medium Prefocus Lampholder with a Unique Shock Absorbing Base. For other Lampholders (i.e. Mogul Prefocus, Mogul Bipost or 2-Pin Prefocus), other methods of aiming the searchlight (i.e. Wheel Control), or to add the LED Hybrid and/or NightFINDER™ Thermal Camera Features, consult Factory for Model Number, Drawing and Price.